USER MANUAL

855.025 DIGITAL LEVEL M25
855.060 DIGITAL LEVEL M60
855.120 DIGITAL LEVEL M120

EN ENGLISH

Manual
in your language?

Check the back cover

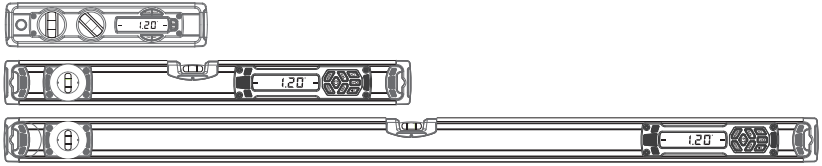

FUTECH
futech-tools.com

OVERVIEW

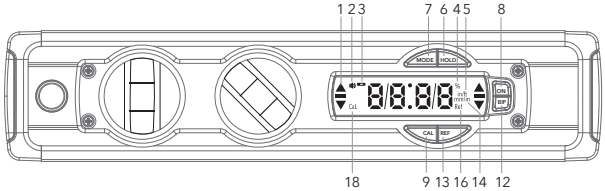
1 2 3
7 6 4 5
8
MODE
HOLD
ON
OFF
CAL
REF
18
9 13 16 14 12

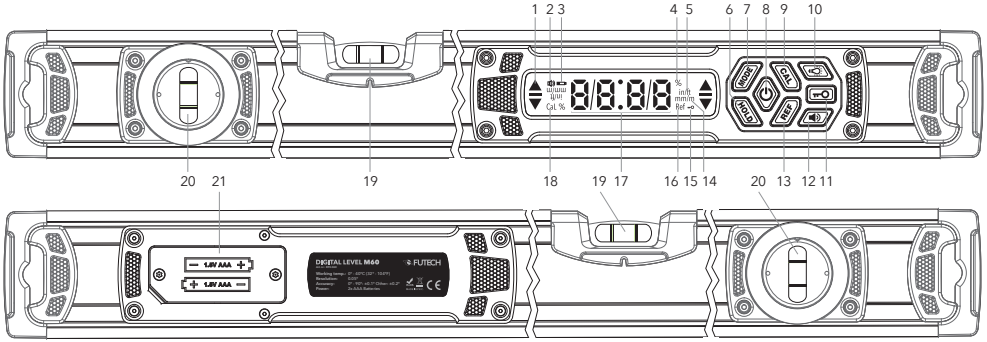
1 2 3
4 5
6 7 8 9
10
MODE
CAL
HOLD
REF
20 21
19
18
19 17
16 15 14
20 13 12 11
1,5V AAA
1,5V AAA
DIGITAL LEVEL M60
FUTECH

1 Level direction indicators
2 Audio indicator
3 Low battery indicator
4 Percentage indicator
5 In/ft indicator
6 HOLD button
7 MODE button
8 On/Off button
9 Calibration button
10 Background light button
11 Lock button
12 Acoustic guidance
13 Reference button
14 mm/m indicator
15 Keylock indicator
16 REF mode indicator
17 Main display line
18 Calibration mode indicator
19 Horizontal bubble vial
20 Vertical bubble vial
21 Battery compartment (2x 1.5V AAA batteries)

■ BATTERIES

This device operates on two AAA batteries. Acid, alkaline, or dry batteries are all compatible.

Important: If the Digital Level will not be used for an extended period, remove the batteries to prevent corrosion damage.

When the Low battery indicator [3] appears, replace the batteries as follows:

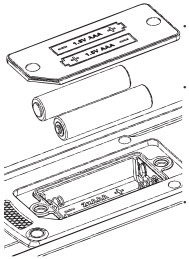

- Unscrew and remove the battery compartment cover.
- Insert two new AAA batteries, ensuring correct polarity as indicated inside the compartment.
- Reattach the battery cover and tighten the screw securely.

USER

■ TURNING THE DIGITAL LEVEL ON/OFF

- Press the On/Off button [8] briefly to switch the level on.
- To turn the device off, press and hold the On/Off button [8] for 3 seconds.

After switching on, the device will automatically perform a quick self-calibration. A beep will sound to indicate the level is ready for use.

■ AUDIO LEVELING

The function helps when visual monitoring is not possible.

Use the Acoustic guidance button [12] to enable or disable the audio leveling function.

When activated, the level emits sound feedback as it approaches a reference angle of 0°, 45° or 90°:

- The pitch and frequency increase the closer it gets to the reference.
- A continuous tone indicates perfect alignment (zero deviation).

■ LEVEL DIRECTION

The Level direction indicators [1] show which side of the level needs to be adjusted to reach a horizontal or vertical position.

·

Raise the right side

·

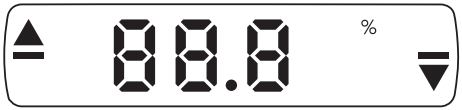

Raise the left side

·

Level is properly aligned

■ SELECTING MODE

Press the MODE button [7] to cycle through the available measurement units. The device will remember the last selected mode and use it the next time it is turned on.

MODE	DESCRIPTION	FUNCTION
Mode 1	Degree	Angle in degrees with two decimals
Mode 2	Pecentage	Slope in percent with two decimals
Mode 3	mm/m	Millimeter per meter
Mode 4	in/ft	inches per feet

■ BACKLIGHT (ONLY M60 AND M120)

Press the Background light button [10] to toggle the display backlight on or off.

The backlight will automatically switch off after 2 minutes of inactivity to conserve battery life.

■ HOLD FUNCTION

To freeze the current reading on the display, press the HOLD button [6].

Press the HOLD button [6] again to return to live measurement mode.

■ REFERENCE (REF) FUNCTION

To define a custom reference (zero) angle:

· Position the level at the desired angle and press the Reference button [13].

The REF mode indicator [16] will begin to flash, and the current angle is stored as the new “zero.”

· To return to the absolute (true) zero, press the Reference button [13] again.

■ INACTIVITY SHUTDOWN

The level will automatically power off after 7.5 minutes of inactivity. To change this timer setting (only for M60 and M120):

· Press the Background light button [10] and Lock button [11] at the same time.

- Press the Background light button **[10]** repeatedly to cycle through the available options:
  - 1/8h (7.5 minutes)
  - 1h (1 hour)
  - 2h (2 hours)

Press the Lock button **[11]** to confirm your selection.

To change this timer setting (only for M25):

- Press the MODE button **[7]** and HOLD button **[6]** at the same time.
- Press the MODE button **[7]** repeatedly to cycle through the available options:
  - 1/8h (7.5 minutes)
  - 1h (1 hour)
  - 2h (2 hours)

Press the HOLD button **[6]** to confirm your selection.

QUICK CALIBRATION

To perform a quick user calibration:

- Place the level on a stable surface and press the Calibration button **[9]**. The Calibration mode indicator **[18]** will appear on the display.
- Wait for the calibration to complete, then press the Calibration button **[9]** again.
- Rotate the level 180° (keeping it in the same location), and press the Calibration button **[9]** once more.
- After the second calibration is complete, press the Calibration button **[9]** again. The display will return to normal measurement mode.

CARE AND MAINTENANCE

Clean the device using a soft, damp cloth.

Do not immerse the tool in water.

Avoid using aggressive cleaning agents or solvents.

Store the device in a dry environment at temperatures between -20 °C and 65 °C.

Proper care will ensure long-term accuracy and reliability.

WARRANTY

Frame and vials: Limited lifetime warranty.

Electronics: One-year limited warranty.

IMPORTANT

This warranty does not cover damage caused by impact or shock (e.g. dropping the level). Handle the device with care to preserve its accuracy and warranty coverage.

CALIBRATION AND ACCURACY MANAGEMENT

■ ACCURACY CHECK

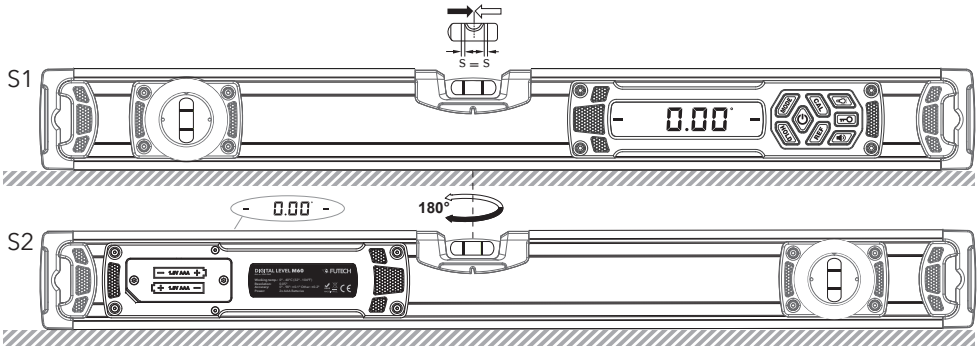

S1 – S2 = 0°~ 0.2° → OK	S1 – S2 = >0.2° → CAL.

To ensure reliable results, regularly check the accuracy before use – especially after a strong impact or a significant temperature change.

- Switch on the Digital Level using the On/Off button **[8]** and place it on a flat surface.
- Use the horizontal bubble vial **[19]** to align the level accurately.
- Note the displayed value (S1).
- Rotate the level 180°, keeping it in the same location, and note the second value (S2).
- Calculate the difference: S1 – S2
  - If the result is between 0° and 0.2°, the level is accurate.
  - If the difference is greater than 0.2°, a calibration is required.

■ FULL USER CALIBRATION

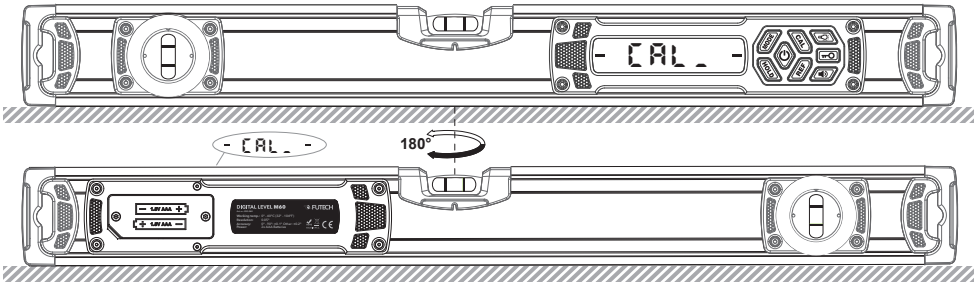

- Turn off the equipment using the On/Off button [8] and put the equipment on a solid, flat surface.
- While switching the level on, press and hold the Calibration button [9] until “CAL” appears on the display.
- Press the Calibration button [9] again. The main display line [17] will show “– CAL_ –” and - CAL_ - will flash three times.
- Rotate the level 180° (LCD facing away from you), keeping it in the same location.
- Press the Calibration button [9] again.

The main display line [17] will show “rdy” and “rdy” will flash three times. The device is now calibrated. (This is an essential step)

- You may press the On/Off button [8] at any time to cancel the calibration process.

NOTE

Calibration must be performed on a flat and smooth surface with a slope no greater than 1.2°. (It does not need to be perfectly level.) If the slope exceeds this limit, “CAL” will remain on the display and the process will not continue. In that case, restart the device and try again.

The level must remain completely stable and flat during the entire calibration process. Do not move, tilt, or touch the device until calibration is complete.

If user calibration does not resolve the issue, proceed to Restore Factory Settings.

■ RESTORING FACTORY SETTINGS

If user calibration does not resolve the issue, you can reset the level to factory settings.

For Digital levels M60 en M120:

- Switch on the Digital Level using the On/Off button [8].
- Press and hold the Calibration button [9], the Acoustic guidancebutton [12] and Reference button [13] at the same time.

After a few seconds, the screen will display the reset confirmation and factory settings will be restored.

For Digital level M25:

- Switch on the Digital Level using the On/Off button [8].
- Press and hold the Calibration button [9], the BIP button [XX] and Reference button [13] at the same time.

After a few seconds, the screen will display the reset confirmation and factory settings will be restored.

TECHNICAL SPECIFICATIONS

	DIGITAL LEVEL M25	DIGITAL LEVEL M60	DIGITAL LEVEL M120
Length	25cm (10 inch)	60cm (24 inch)	120cm (48 inch)
Electronic Module accuracy		± 0.1° at 0° and 90° ± 0.2° between 0° and 90°	
Spirit Level accuracy		± 0.5 mm/m (all positions)	
Batteries		2× 1.5V AAA Batteries	
Operating temperature range		0°C ~ 40°C	
Storage temperature range		−10°C ~ 50°C	
Protection (dust / water)		IP65	

CE RoHS

DECLARATION OF CONFORMITY

Futech (Belgium) declares under its own responsibility that this device:

- 855.025 Digital Level M25
- 855.060 Digital Level M60
- 855.120 Digital Level M120

is in conformity with the standards

EMC DIRECTIVE 2014/30/EU:
- EN IE 61326-1:2021

ROHS DIRECTIVE 2011/65/EU and Amendment (EU) 2015/863:
- IEC 62321-2:2021
- IEC 62321-4:2013 + A1:2017
- IEC 62321-6:2015
- IEC 62321-7-2:2017
- IEC 62321-3-1:2013
- IEC 62321-5:2013
- IEC 62321-7-1:2015
- IEC 62321-8:2017

Lier, Belgium, March, 2025
Patrick Waûters

USER MANUAL

other languages:

DA DANSK

DE DEUTSCH

ES ESPAÑOL

ET EESTI KEEL

FI SUOMEN KIELI

FR FRANÇAIS

IS ÍSLENSKA

IT ITALIANO

NL NEDERLANDS

NO NORSK

PT PORTUGUÊS

SL SLOVENŠČINA

SV SVENSKA

FUTECH

FOLLOW US ON

FOLLOW US ON

FOLLOW US ON

FOLLOW US ON

2606151143916